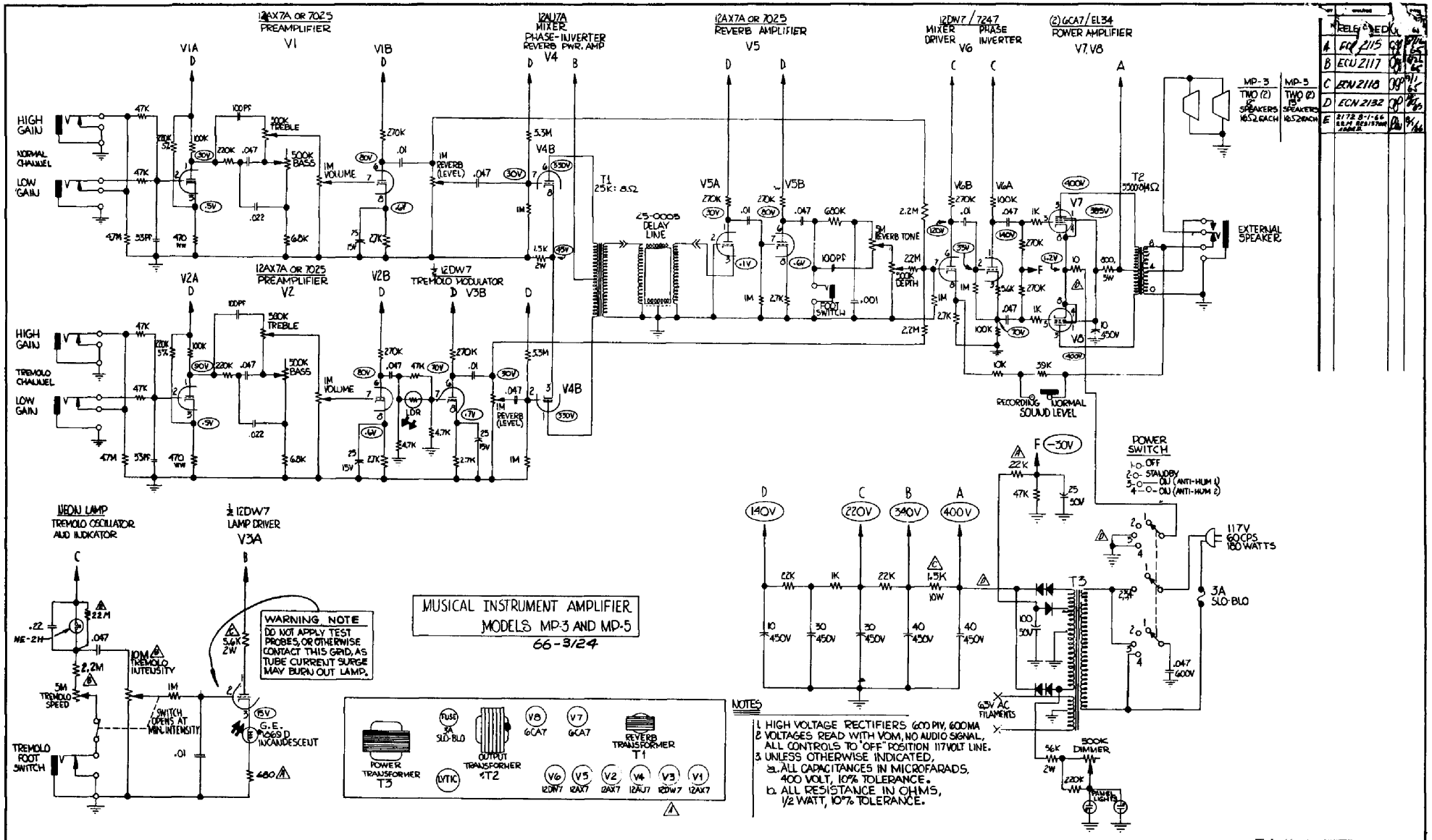
12AX7A OR 7025 PREAMPLIFIER V1
12AU7A MIXER PHASE-INVERTER REVERB PWR. AMP V4
12AX7A OR 7025 REVERB AMPLIFIER V5
12DW7/7247 MIXER DRIVER V6 PHASE INVERTER
(2) 6CA7/EL34 POWER AMPLIFIER V7, V8
HIGH GAIN
NORMAL CHANNEL
LOW GAIN
TREMOLO CHANNEL
500K TREBLE
500K BASS
1M VOLUME
1M REVERB (LEVEL)
T1 25K: 8Ω
25-0005 DELAY LINE
5M REVERB TONE
500K DEPTH
FOOT SWITCH
T2 3500-8Ω
MP-3 TWO (2) 12" SPEAKERS 16Ω EACH
MP-5 TWO (2) 15" SPEAKERS 16Ω EACH
EXTERNAL SPEAKER
12AX7A OR 7025 PREAMPLIFIER V2
½ 12DW7 TREMOLO MODULATOR V3B
RECORDING NORMAL SOUND LEVEL
POWER SWITCH
1-O- OFF
2-O- STANDBY
3-O- ON (ANTI-HUM 1)
4-O- ON (ANTI-HUM 2)
117V 60CPS 180 WATTS
3A SLO-BLO
NEON LAMP TREMOLO OSCILLATOR AND INDICATOR
½ 12DW7 LAMP DRIVER V3A
10M TREMOLO INTENSITY
5M TREMOLO SPEED
SWITCH OPENS AT MIN. INTENSITY
G.E. 1069D INCANDESCENT
TREMOLO FOOT SWITCH
WARNING NOTE
DO NOT APPLY TEST PROBES, OR OTHERWISE CONTACT THIS GRID, AS TUBE CURRENT SURGE MAY BURN OUT LAMP.
MUSICAL INSTRUMENT AMPLIFIER
MODELS MP-3 AND MP-5
66-3124
POWER TRANSFORMER T3
FUSE 3A SLO-BLO
OUTPUT TRANSFORMER T2
LYTIC
V8 6CA7
V7 6CA7
REVERB TRANSFORMER T1
V6 12DW7
V5 12AX7
V2 12AX7
V4 12AU7
V3 12DW7
V1 12AX7
140V
220V
340V
400V
-30V
T3
6.3V AC FILAMENTS
500K DIMMER
PANEL LIGHTS
NOTES
1. HIGH VOLTAGE RECTIFIERS 600 PIV, 600MA
2. VOLTAGES READ WITH VOM, NO AUDIO SIGNAL, ALL CONTROLS TO "OFF" POSITION 117VOLT LINE.
3. UNLESS OTHERWISE INDICATED,
a. ALL CAPACITANCES IN MICROFARADS, 400 VOLT, 10% TOLERANCE.
b. ALL RESISTANCE IN OHMS, 1/2 WATT, 10% TOLERANCE.
RELEASED
A ECU 2115
B ECU 2117
C ECN 2118
D ECN 2132
E 2172 8-1-66 22M RESISTOR ADDED
B.C. 30-65
ESTEY [redacted]
TORRANCE, CALIFORNIA
MUSICAL INSTRUMENT AMP.
MP-3 or MP-5
D
66-3124
E
25-%

13